Partnership. With Guarantee.

2/2-Way coaxial solenoid valve - direct-acting
Series CVT/CVF-25

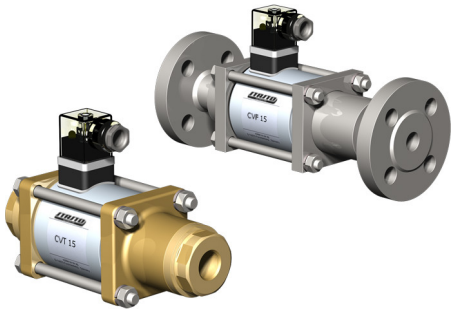

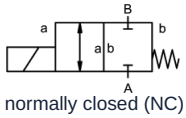

normally closed (NC)

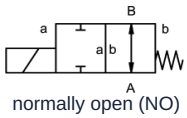

normally open (NO)

Design type	2/2-way coaxial solenoid valve, direct-acting, normally closed or normally open
Mode of operation	pressure-relieved, with spring return
Nominal size	DN 25mm
Connection	CVT: G1"...G11/2", CVF: Flanges PN16/40/100 , Special flanges and threads on request
Pressure range	0...16, 0...40, 0...63 or 0...100bar, > 100bar on request
Back pressure	P2 > P1, available (max. 16bar)
Materials	optional Body Brass, Nickel-plated brass, Nickel-plated steel, Galvanized steel, non-ferrous metal-free or Stainless steel Valve seat Plastic on metal, Sealing materials NBR, PTFE, FKM, CR, EPDM The material specifications of the versions refer exclusively to the valve connection parts in contact with the medium
Media	gaseous - liquid - high-viscosity - gelatinous - contaminated
Flow direction	A → B, according to marking, (Special version alternating max. 16bar)
Mounting type	Installation in rigid piping system, Mounting bracket on request
Mounting position	any
Vacuum Leakage rate	< 10^{-6} mbar*l*s^{-1}
Kv value	11,2m³/h
Switching cycles	130/min.
Switching time	ON 130ms, CLOSED 130ms
Medium temperature	-20...+100°C (Special version -40...+160°C)
Ambient temperature	-20...+80°C
Approvals	on request LR/GL/EN10204
Weight	CVT 8,0kg, CVF 10,5kg
Options	Vacuum tests with certificate, Limit switch inductive (Normally closed (NC) PNP- Icomatic/Balluf), Limit switch inductive NAMUR (+ Switching amplifier), Limit switch mechanical (Changeover contact), Version ATEX, cushioned closing, Manual emergency override, Version TÜV, Version DVGW

+43 512 52076
austria@stasto.eu
© STASTO Automation KG

Voltage type	AC and DC voltage
Standard voltage	230V/40-60Hz, 24VDC, Permissible voltage fluctuation ±10%
Special voltages	on request
Solenoid system	DC DC solenoid, AC DC solenoid with integrated rectifier (above 100°C with separate rectifier)
Insulation class	H 180°C
Current consumption	N-coil 24VDC 2,66A, 230VAC 0,36A, H-coil 24VDC 2,66A, 230VAC 0,36A
Duty cycle	100% duty cycle (continuous operation)
Degree of protection	IP65 according to EN 60529 with correctly mounted device connector (protection against dust ingress and water jets)
Scope of delivery	incl. connector according to EN175301-803 Form A (formerly DIN43650)-Cable entry M16x1,5
optional	Device connector according to DESINA, connector to vdma, Terminal box M16x1,5 on request
Additional equipment	Illuminated connector with varistor
Ordering information	Nominal size, Connection, Function NC/NO, Operating pressure, Flow rate, Medium, Medium temperature, Ambient temperature, Rated voltage, Rated voltage Limit switch
Application note	The technical design of the valves is media- and application-specific, which may result in deviations from the general specifications stated in the data sheet with regard to version, sealing materials and characteristic values. In the event of inaccurate or incomplete ordering information or application data, there is a risk of incorrect technical sizing of the valves for the intended application purpose. This may result in the physical and/or chemical properties of the materials or seals used being insufficient for the intended application purpose.

Dimensions

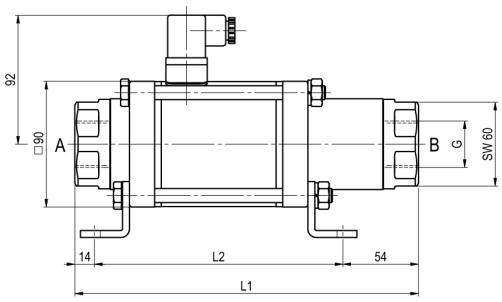

CVT-25 Function NC

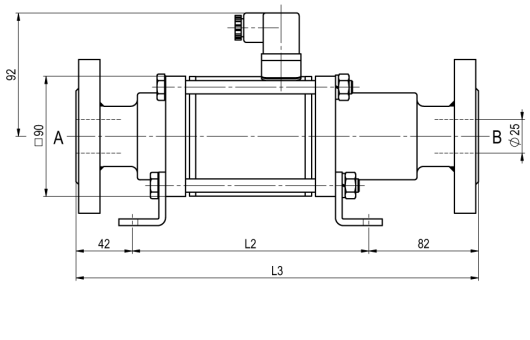

CVF-25 Function NO

Installation lengths	L1	L2	L3
Standard, ATEX Zones 2, 22	246	178	302
ATEX Zones 1, 21	246	192	302
Standard, ATEX Zones 2, 22, with 1/2 inductive limit switches	287	219	34
ATEX Zones 1, 21, with 1/2 inductive limit switches	299	345	355
Standard, ATEX Zones 2, 22, Manual emergency actuation version (Hd) Hood with 1/2 inductive limit switches	299	231	355
ATEX Zones 1, 21, Manual emergency actuation version (Hd) Hood with 1/2 inductive limit switches	299	245	355
with mechanical limit switches	287	219	343

Flange PN	DIN	ØD	Øk	Ød
16	EN 1092-1	115	85	14
40	EN 1092-1	115	85	14
100	EN 1092-1	140	100	18

Mounting brackets must be ordered separately

Electrical connections



M12x1 DESINA / VDMA



DIN EN 175301-803



Terminal box



Form A connector
DIN EN 175301-803

Limit switch



Icomatic Plastic version
M12x1, DC 10 - 60V
AC 15 - 250V
-25...+85°C



Balluff Metal version
M12x1, DC 10 - 30V
-25...+70°C

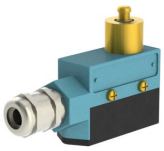

Honeywell
Changeover contact

Illustrations non-binding
Design, dimensional and material changes reserved

+43 512 52076
austria@stasto.eu
© STASTO Automation KG